bZ4X

Scuff plates - Front set

Installation Instructions

Model year:	as from 2022/03	
Vehicle code:	*EAM1**-MWD*SW	
Part number:	PW382-42005	Front set

Manual reference number: AIM 005 193-0

Latest Version SCAN HERE

Revision Record

Rev. No.	Date	Page	Step	Remarks

KIT CONTENT

PW382-42005

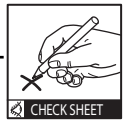

A 2x

TOOLS

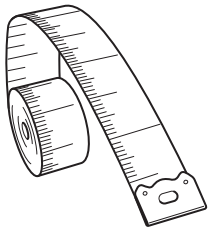

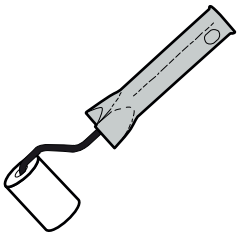

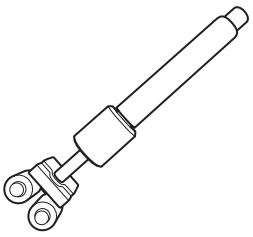

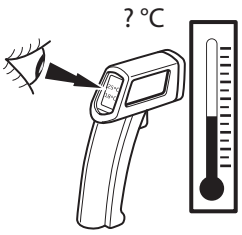

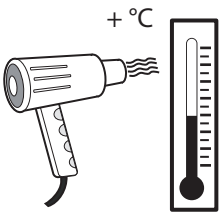

CONSUMABLES

MASKING TAPE

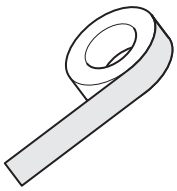

AIM 003 516-*

PERSONAL PROTECTION EQUIPMENT

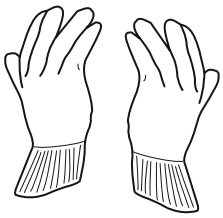

TOYOTA

INFO

Material Safety Data Sheet

Technical Data Sheet

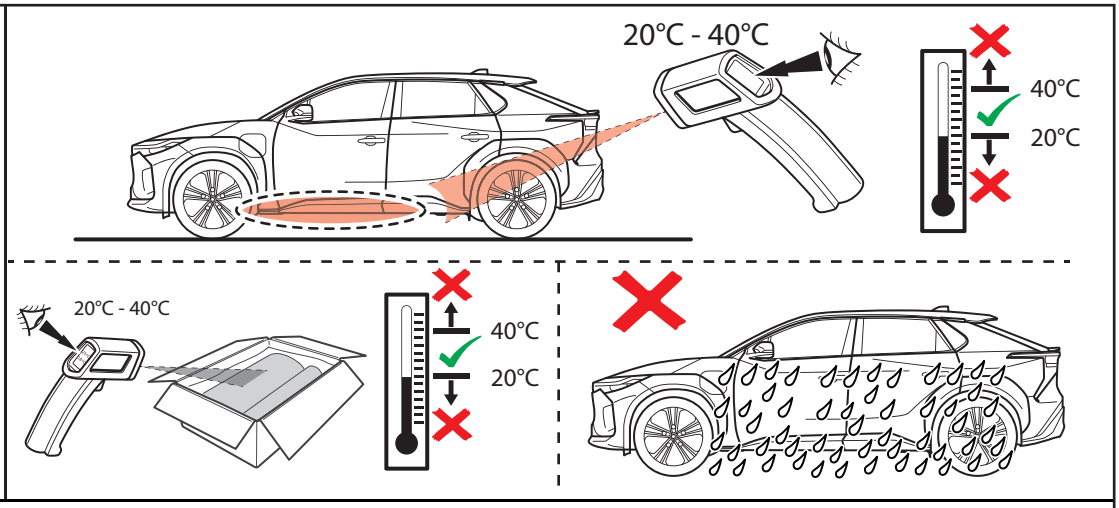

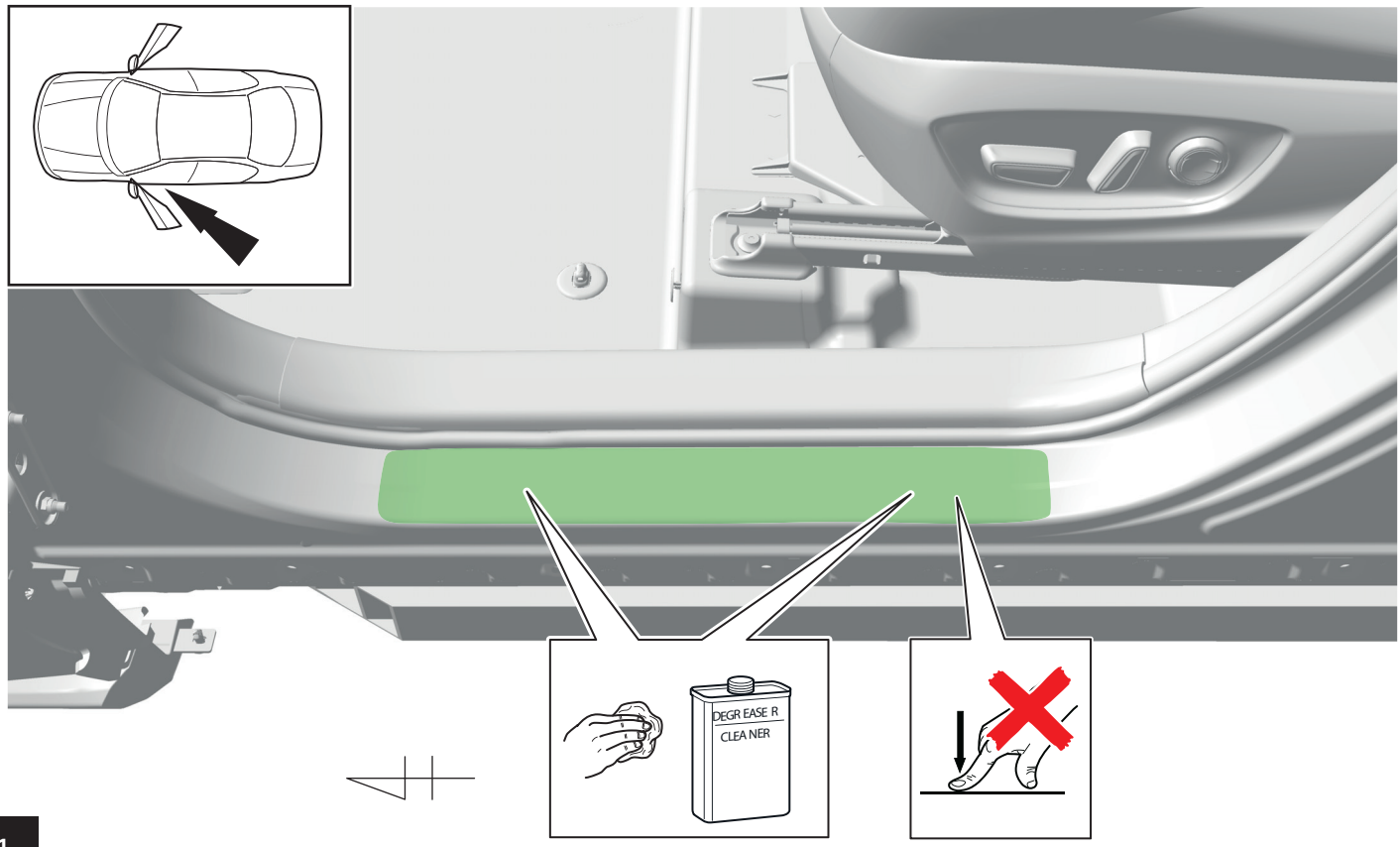

1

TOYOTA

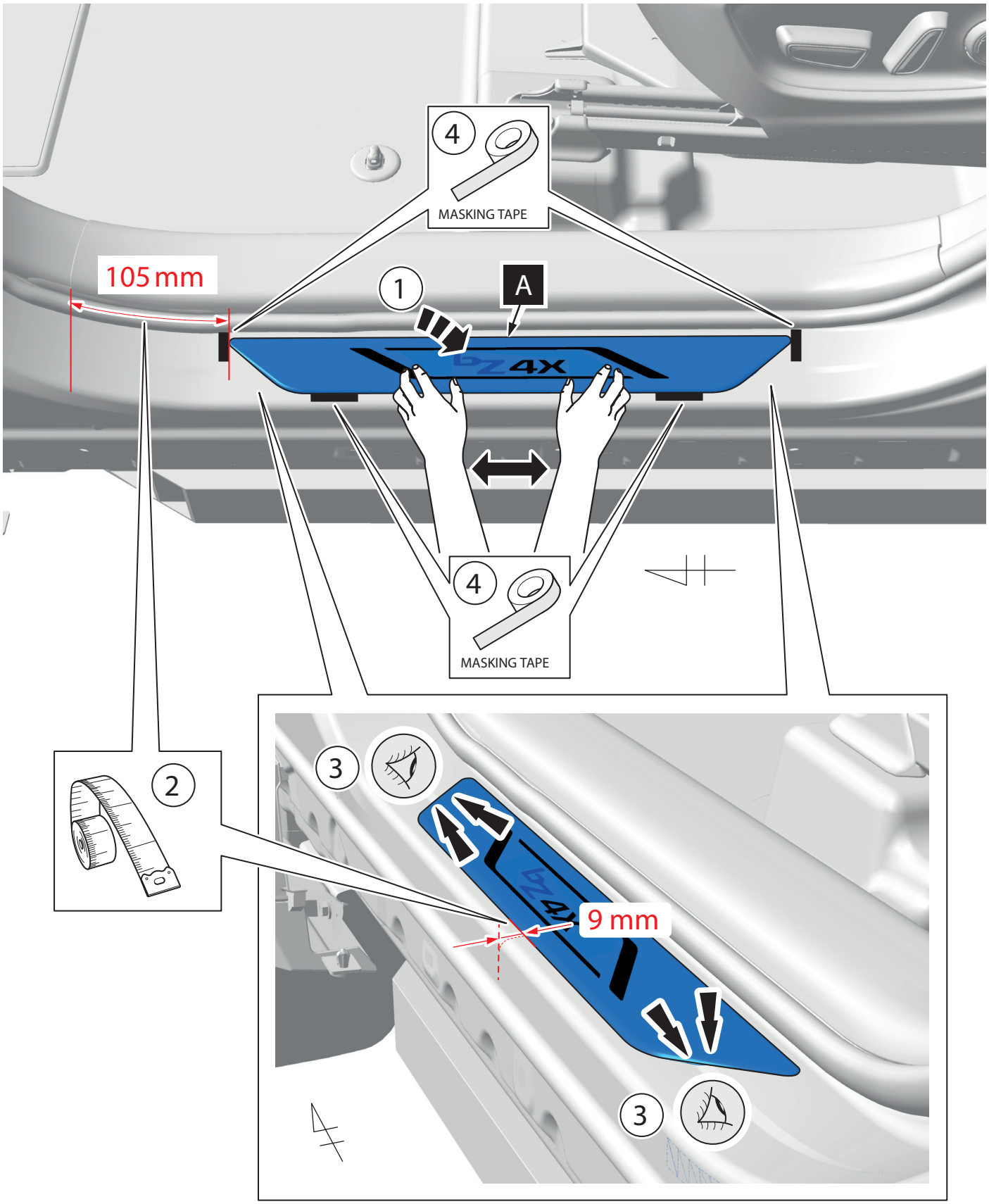

2

TOYOTA

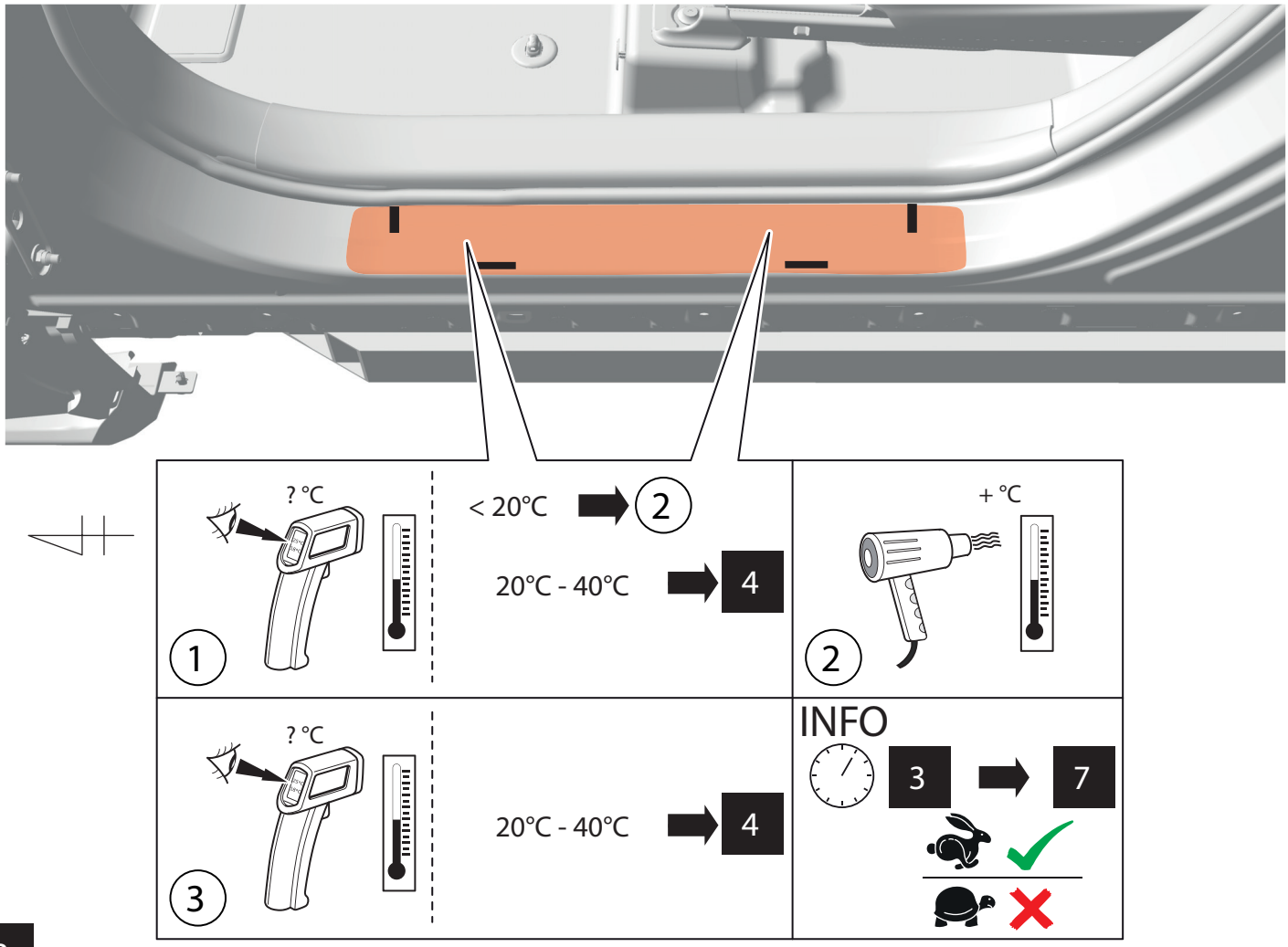
? °C
< 20°C
2
20°C - 40°C
4
+ °C
1
2
? °C
20°C - 40°C
4
INFO
3
7
3

3

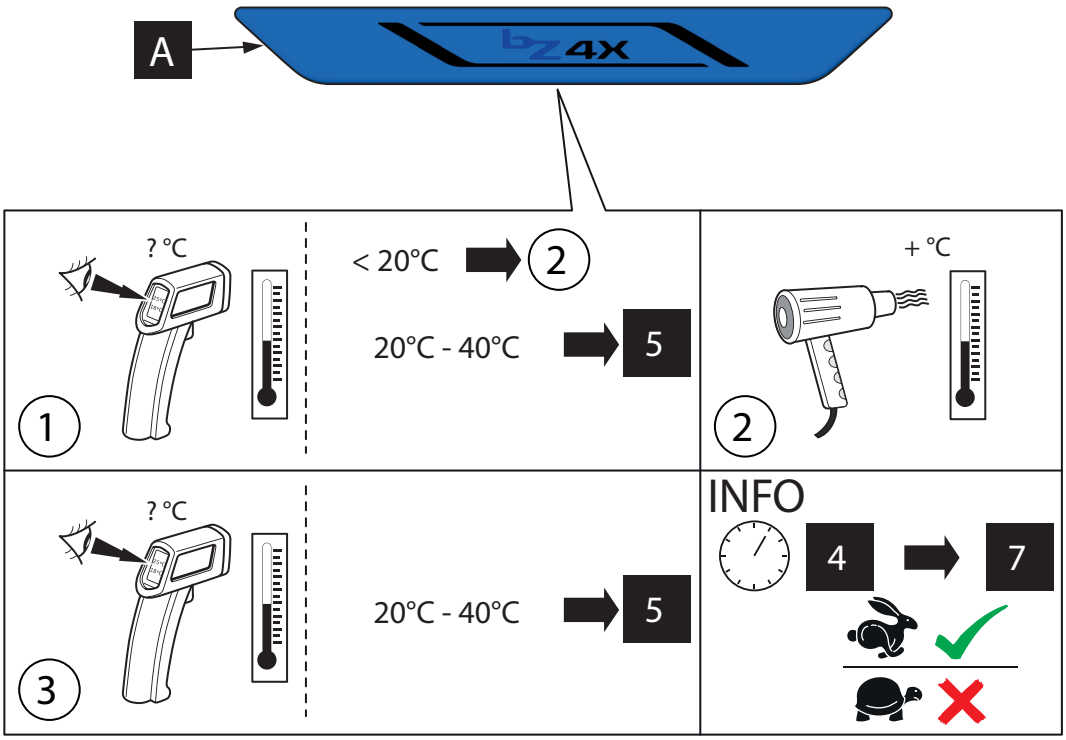
A
bZ4X
? °C
< 20°C
2
20°C - 40°C
5
+ °C
1
2
? °C
20°C - 40°C
5
INFO
4
7
3

4

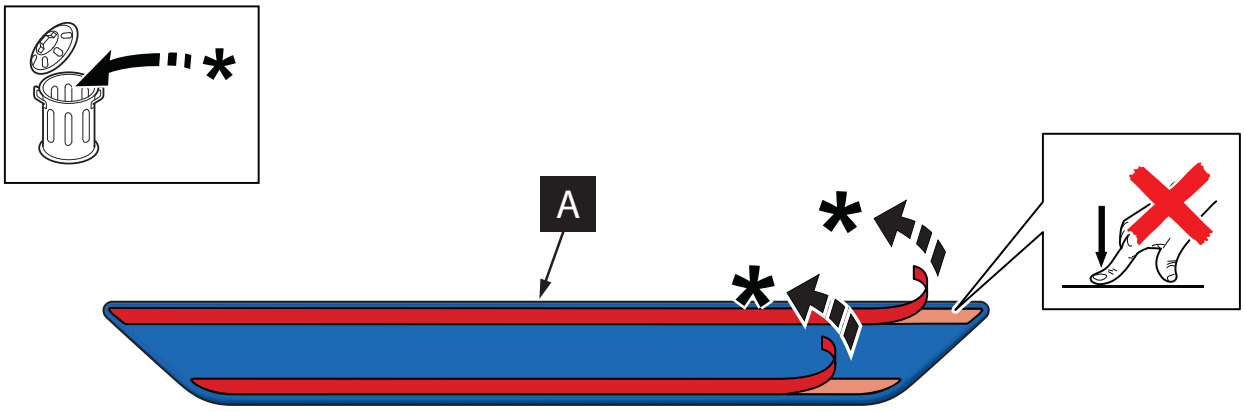

5

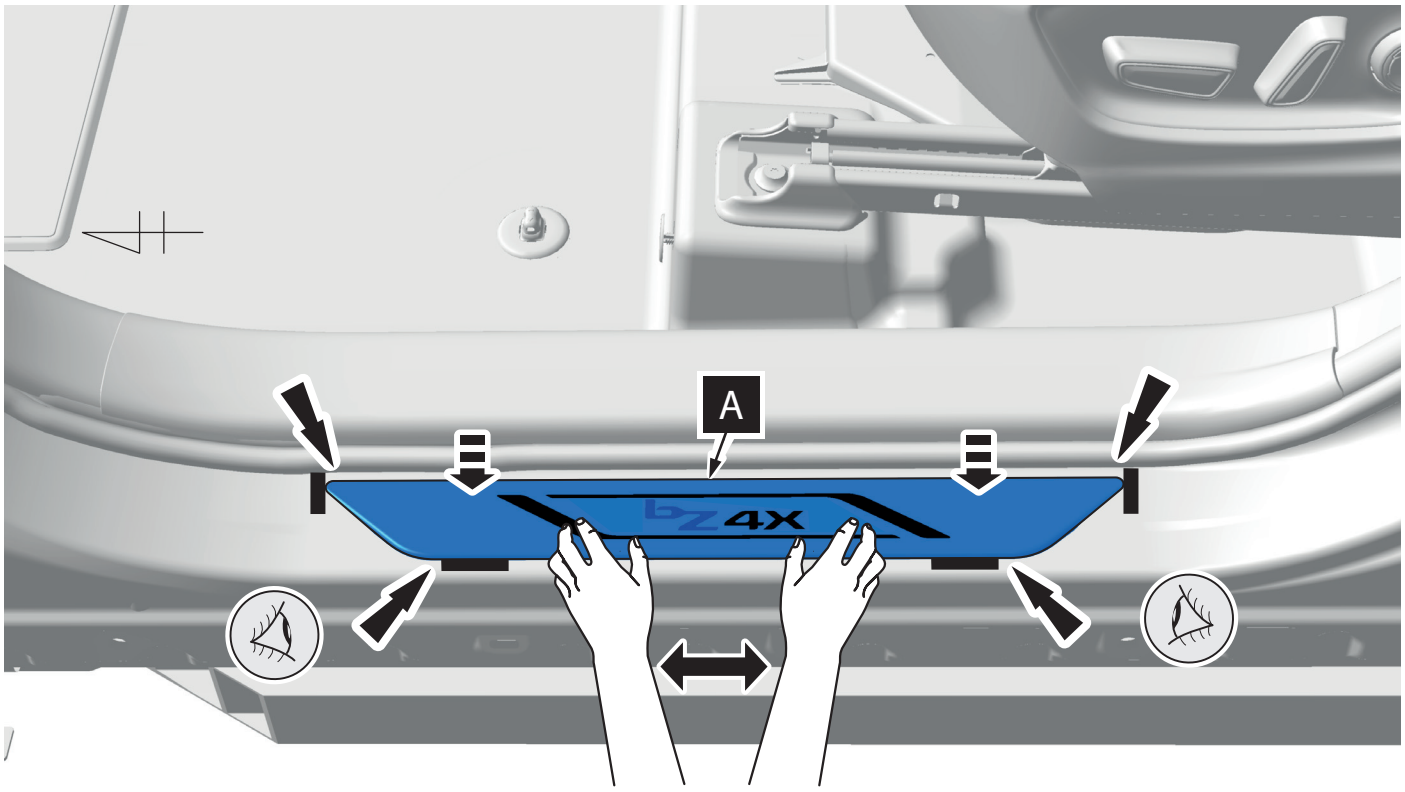

6

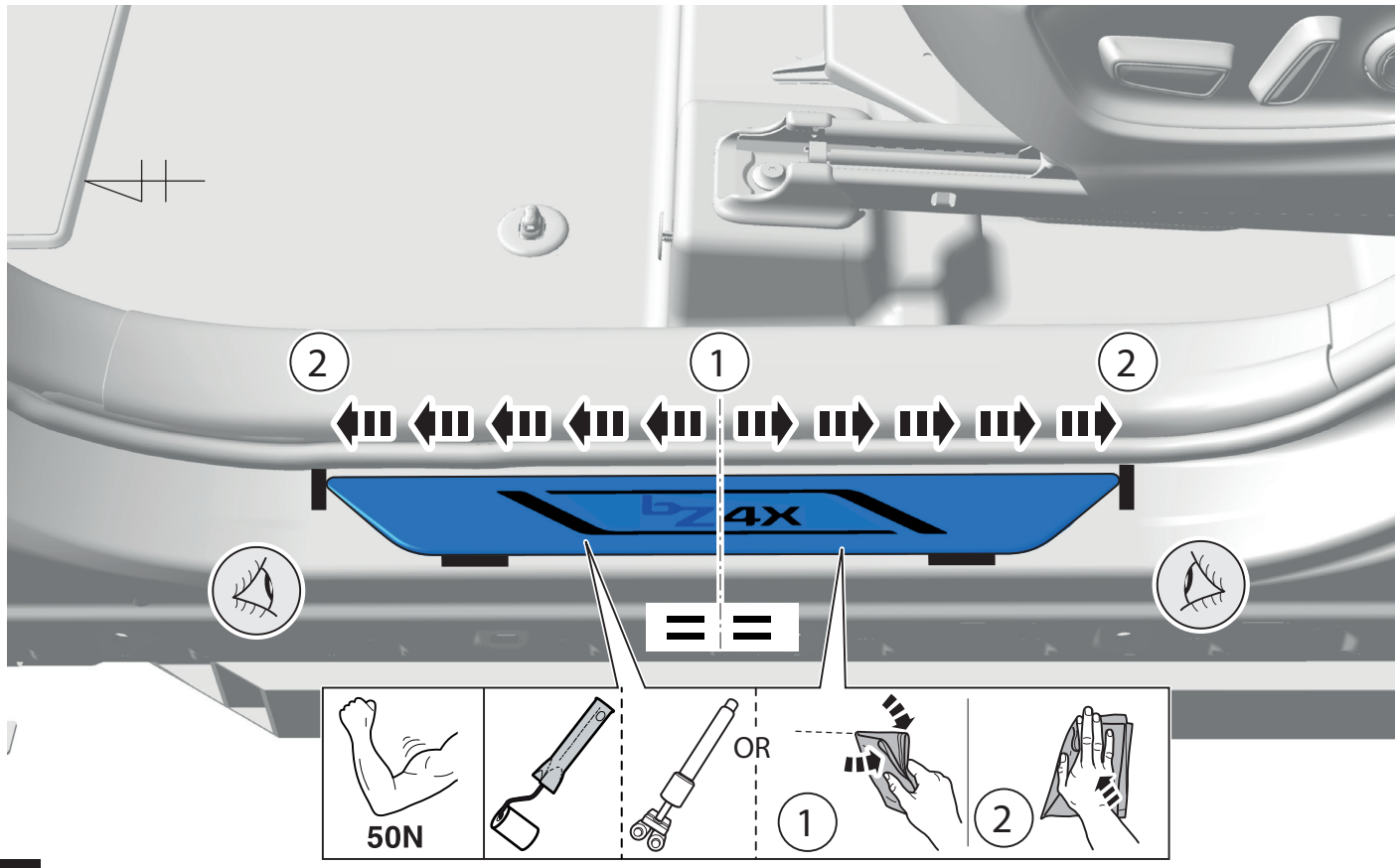

7

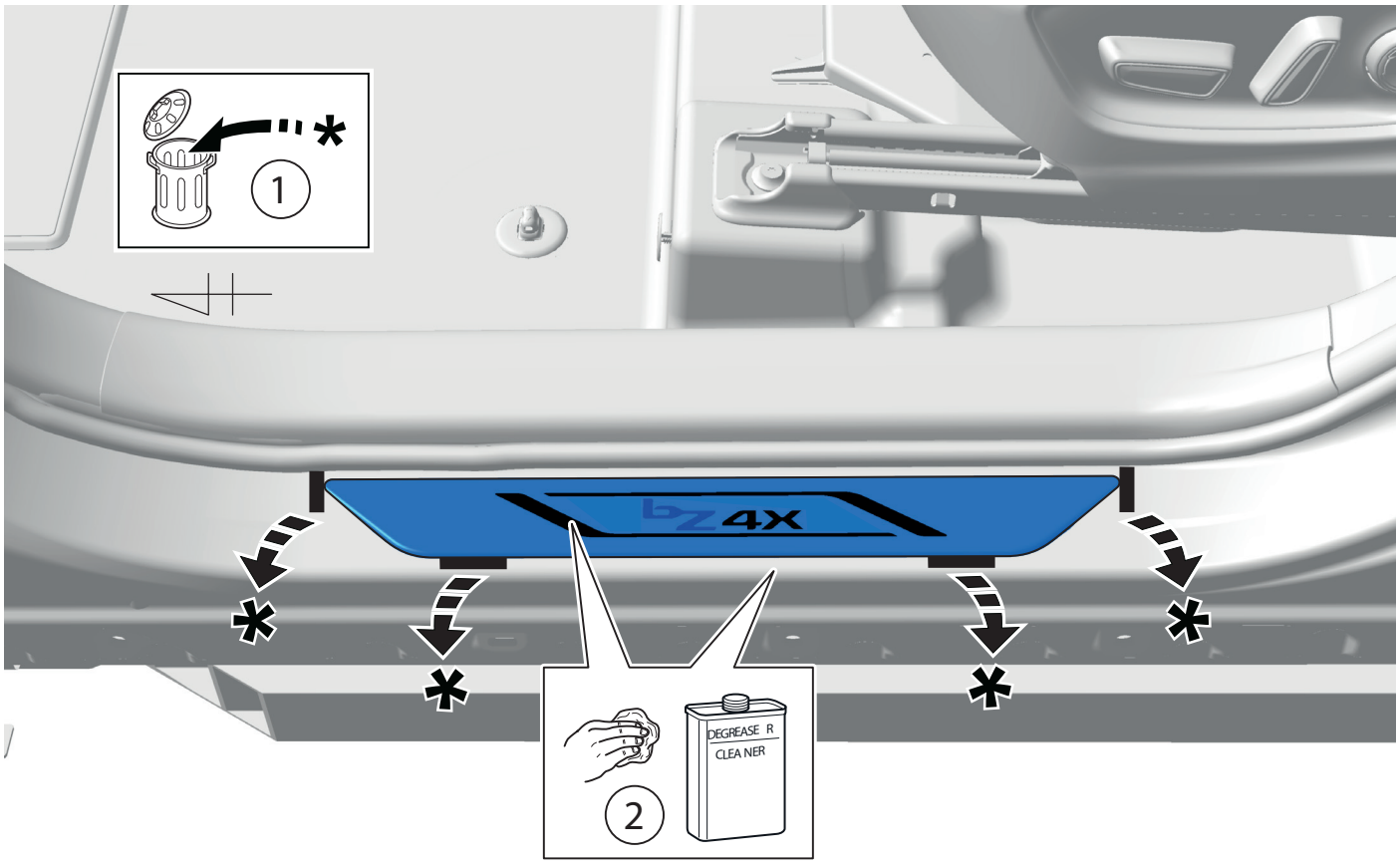

8

RHS = LHS

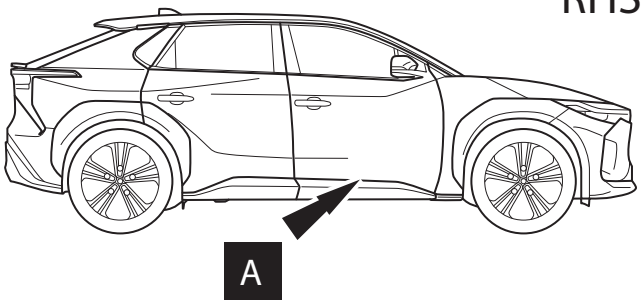

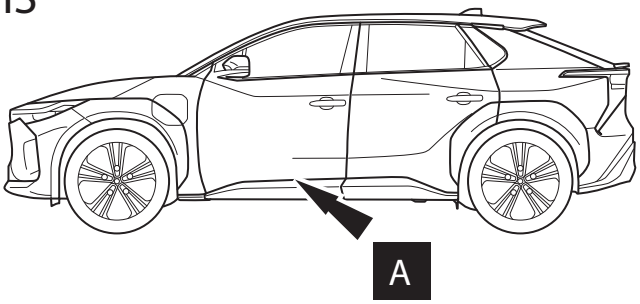

1 - 8

1 - 8

9

CHECK SHEET

Scuff plates - Front set

Model/Year bZ4X as from 2022/03

VINn° ☐☐☐☐☐☐☐☐☐☐☐☐☐☐☐☐☐

DURING INSTALLATION

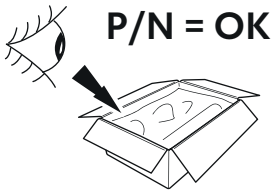

P/N = OK

1 ☐

AFTER INSTALLATION

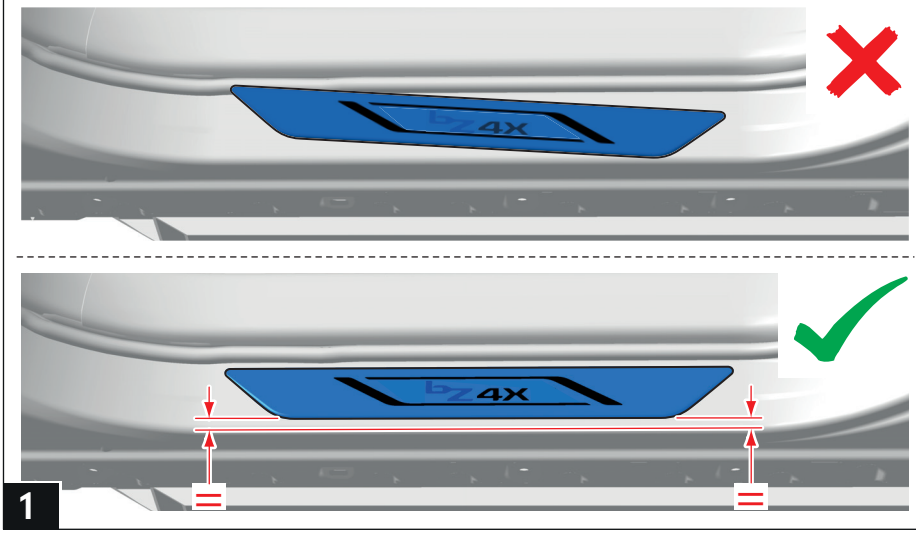

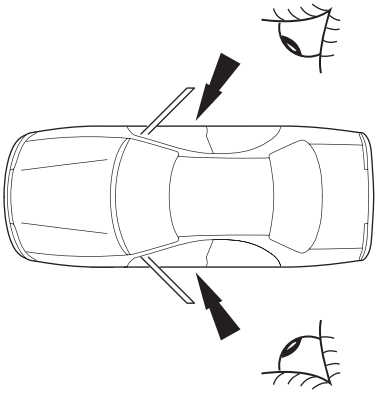

1 2x ☐

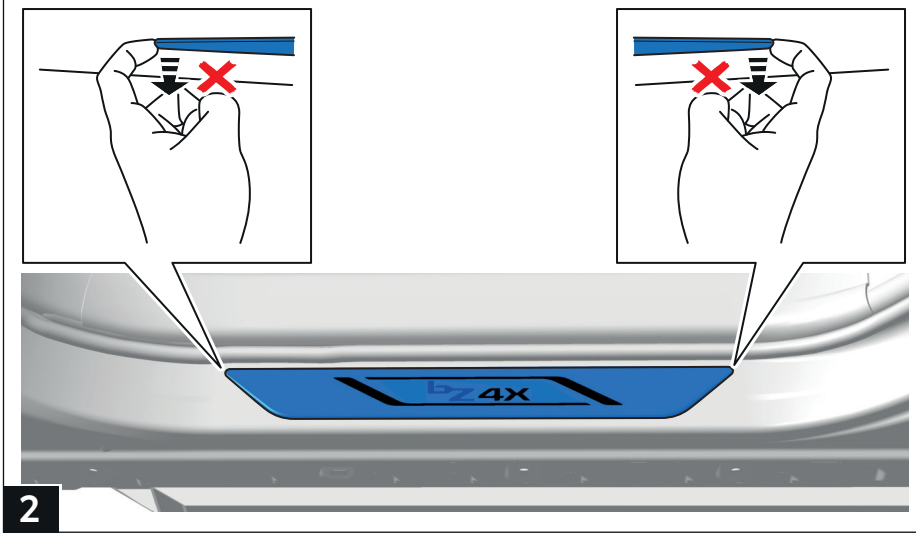

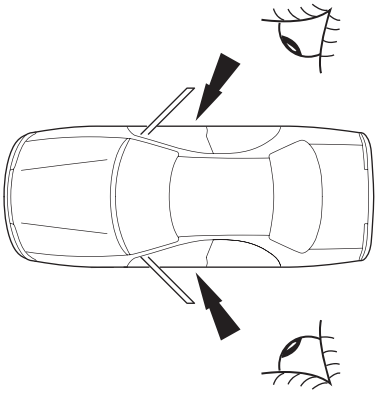

2 2x ☐

TOYOTA

CHECK SHEET

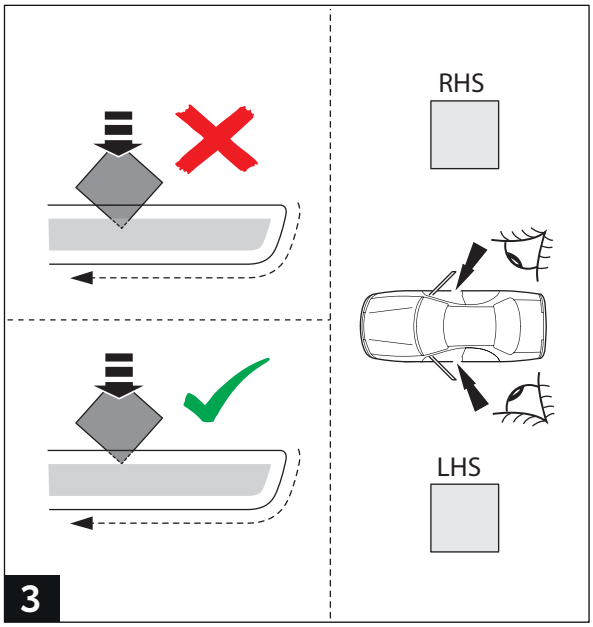

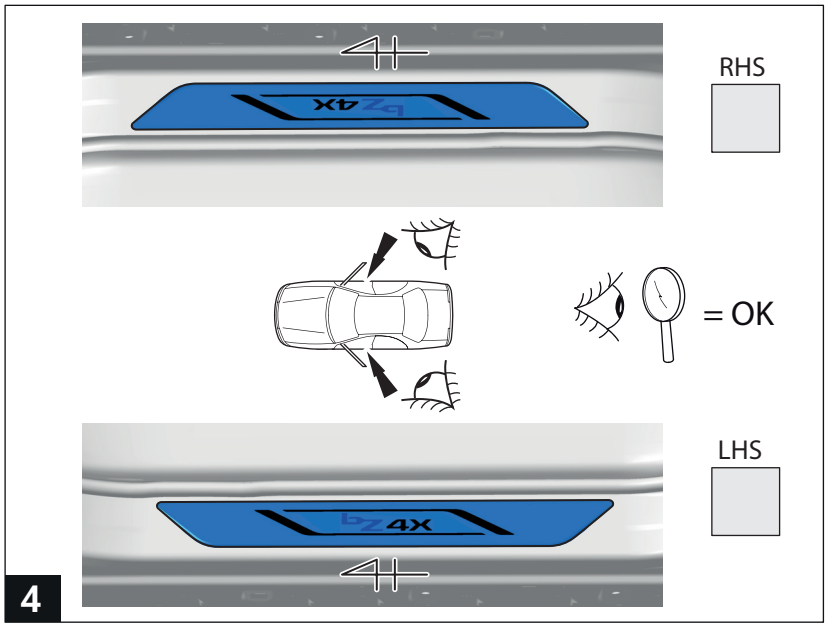

Installation Date:	Technician Name & Signature:	Stamp:
. . / . . /		