1-2. Cab & Chassis drawing

MODEL
FZJ79L-TJMRK3 w/ Fuel Sub Tank

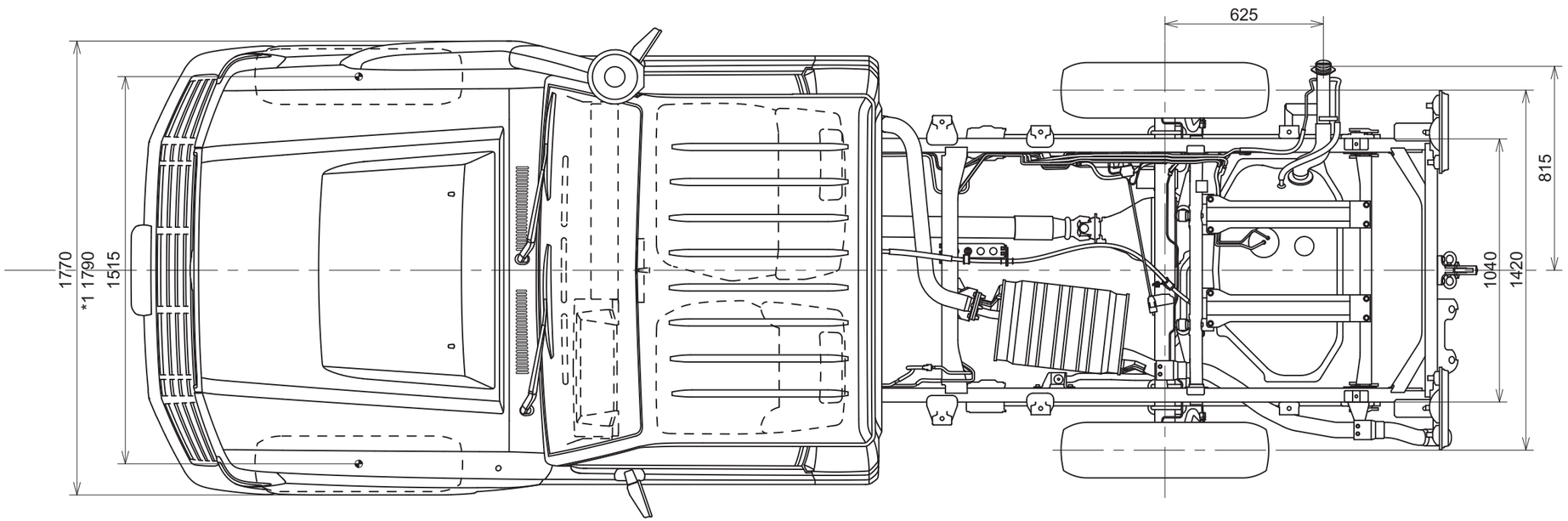

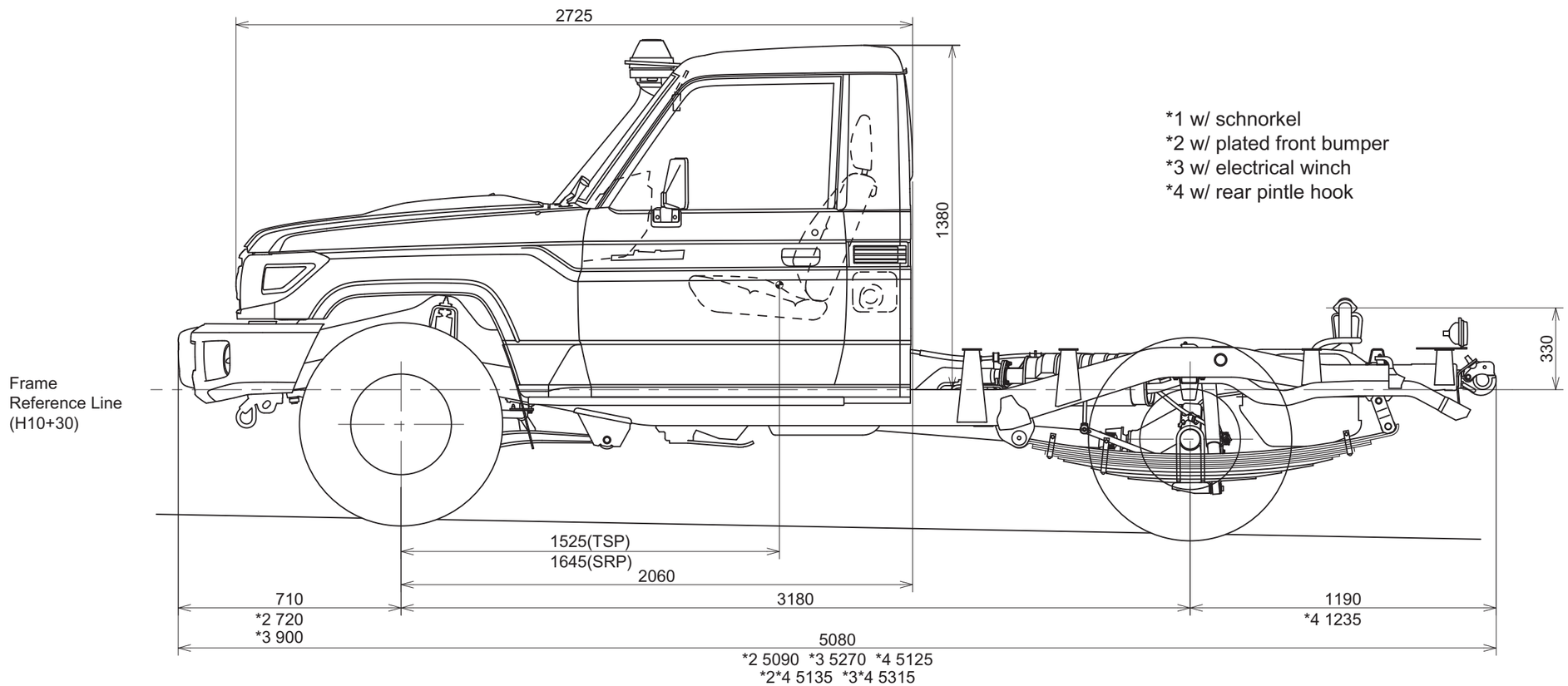

*1 w/ schnorkel
*2 w/ plated front bumper
*3 w/ electrical winch
*4 w/ rear pintle hook