Corolla (Sedan)

Side sills

Installation Instructions

TOYOTA

ALWAYS A
BETTER WAY

Model year:	2019/01
Vehicle code:	Z*E21**-DE***W
Part number:	PW156-02006-**

Manual reference number: AIM 004 394-0

Revision record

Rev. No.	Date	Page	Picture	Update	New	Deleted steps

PW156-02006-**

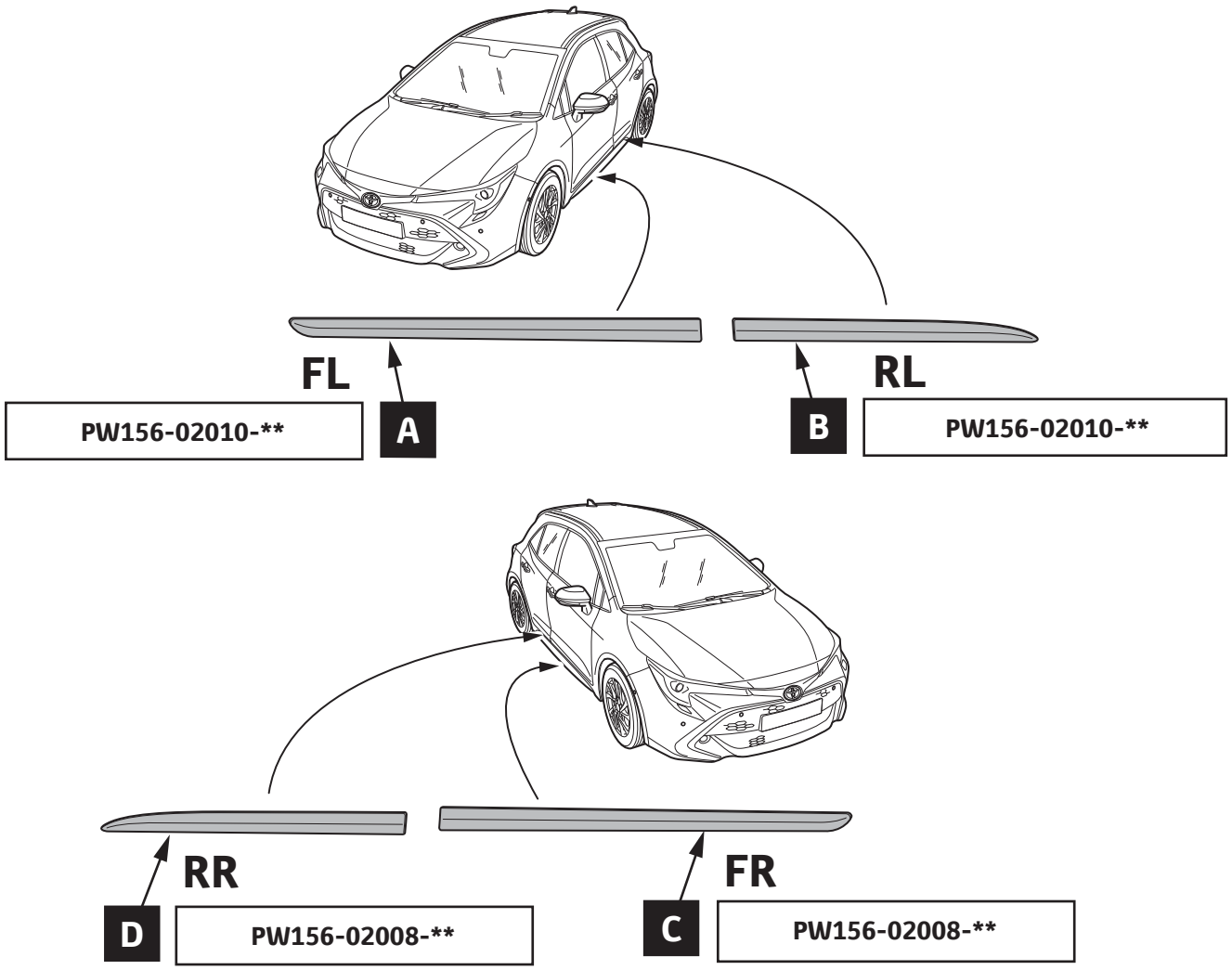

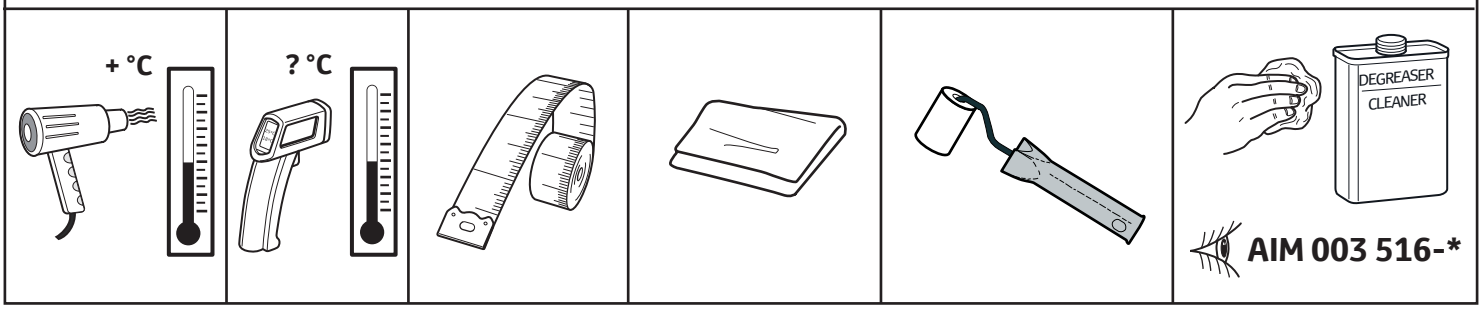

TOYOTA

INFO

Material **S**afety **D**ata **S**heet

Technical **D**ata **S**heet

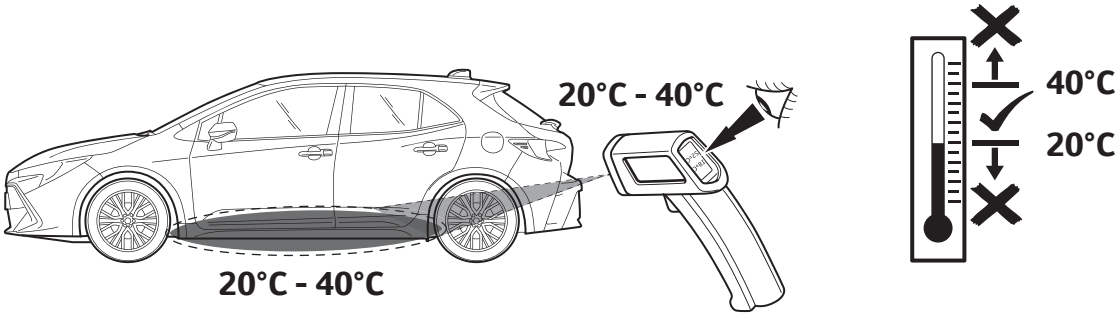

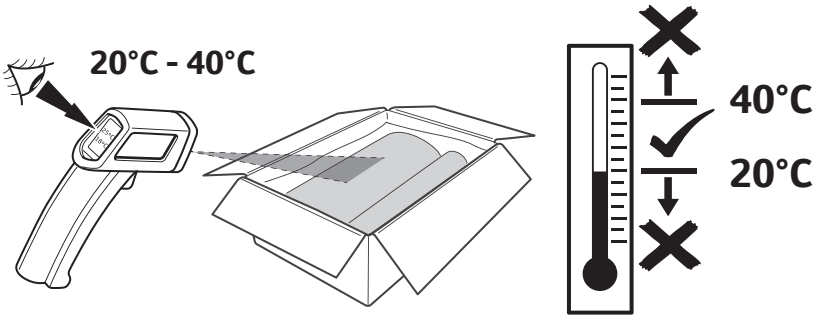

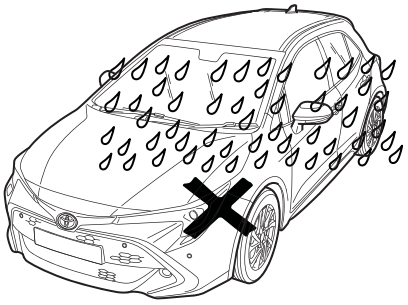

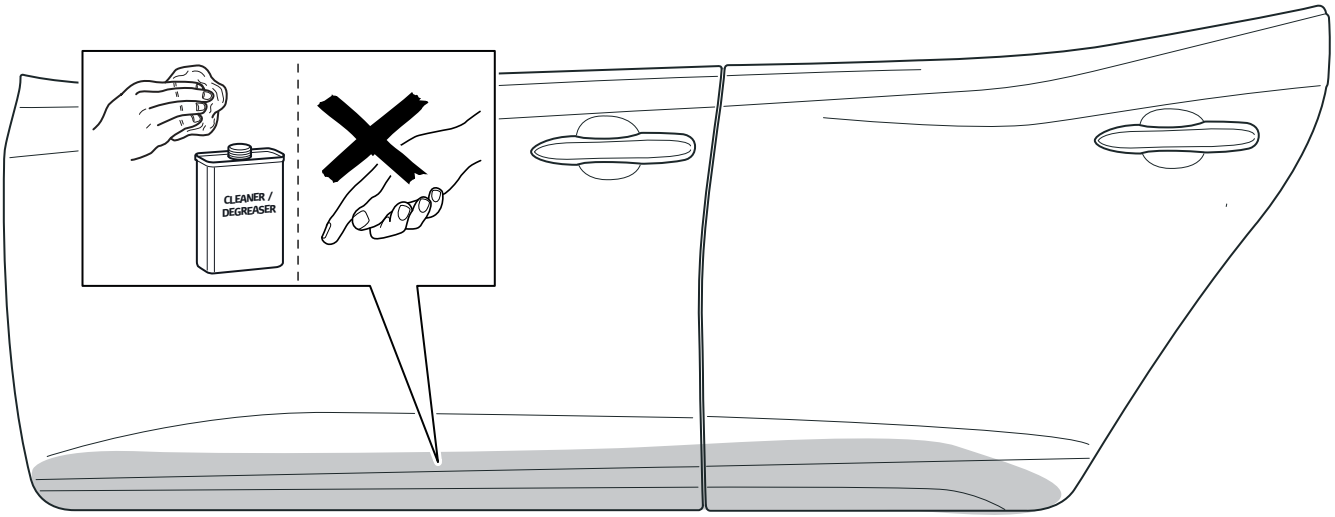

1

TOYOTA

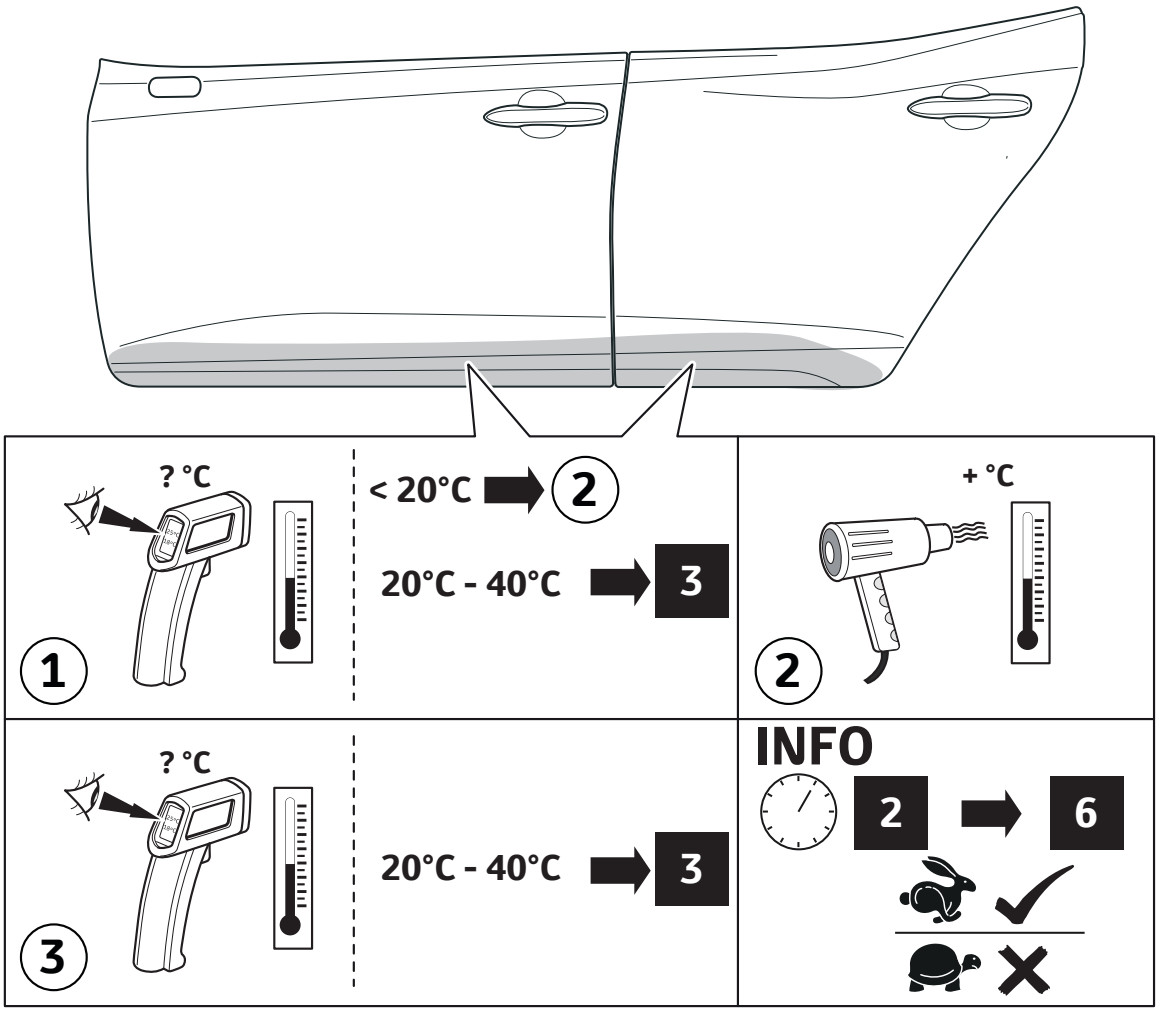
? °C
< 20°C
2
20°C - 40°C
3
1
+ °C
2
? °C
20°C - 40°C
3
3
INFO
2
6

2

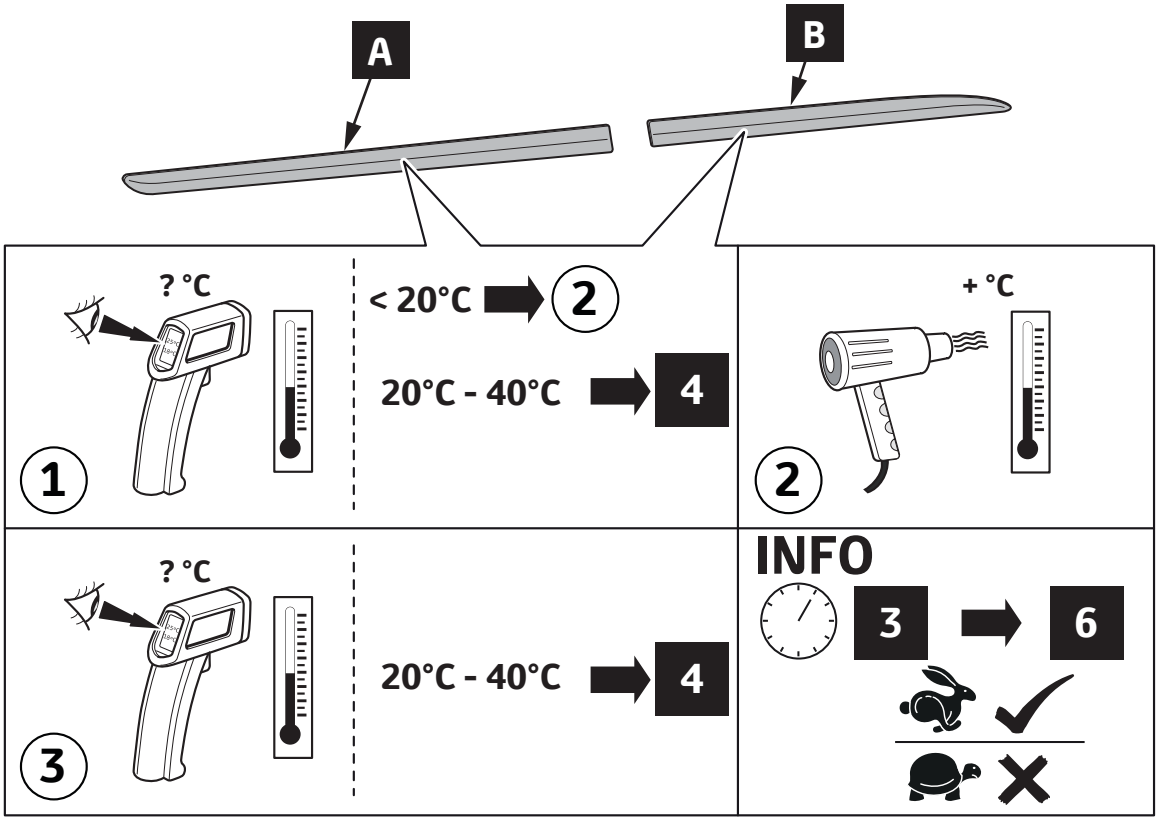
A
B
? °C
< 20°C
2
20°C - 40°C
4
1
+ °C
2
? °C
20°C - 40°C
4
3
INFO
3
6

3

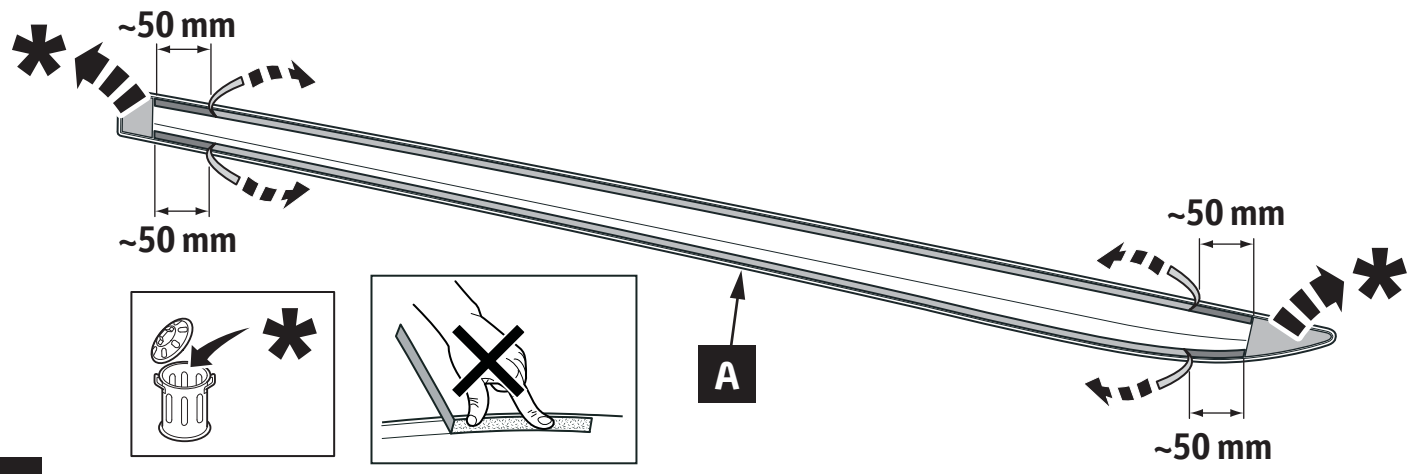

4

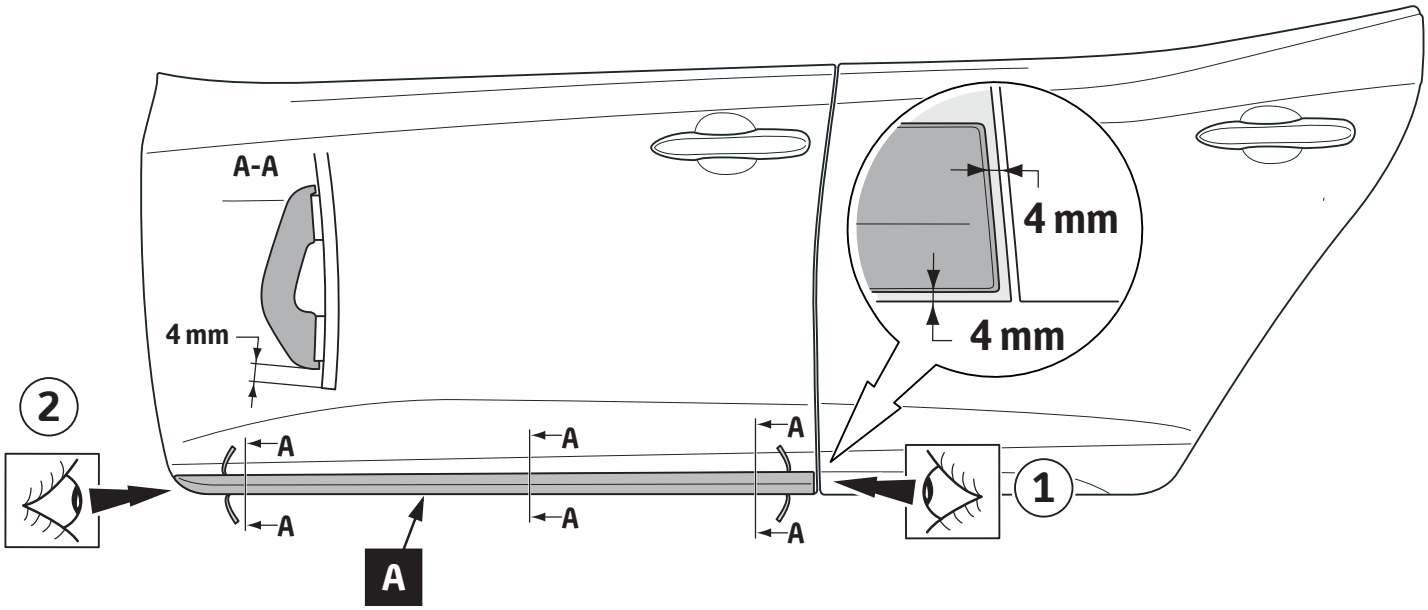

5

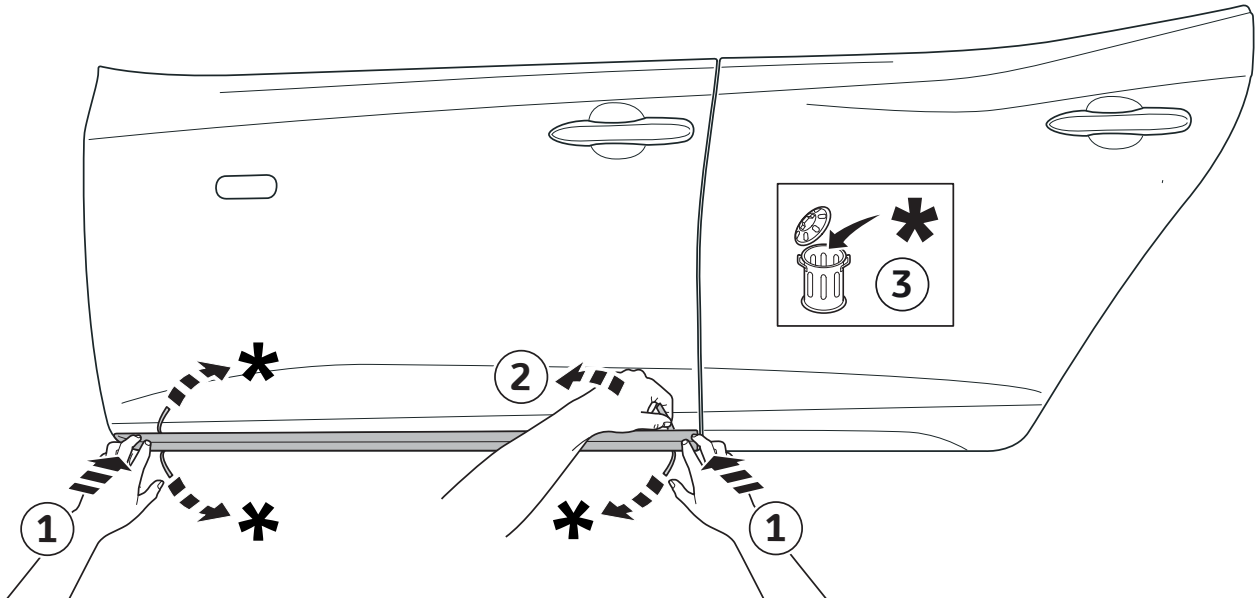

6

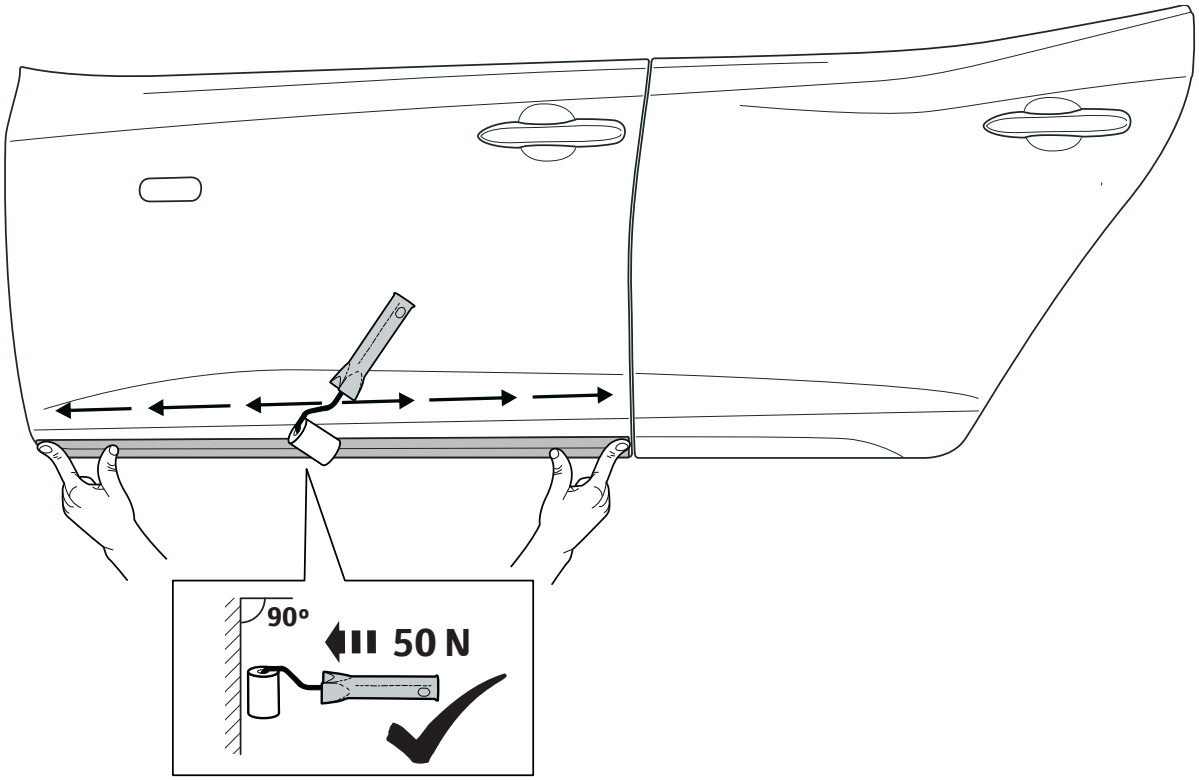

7

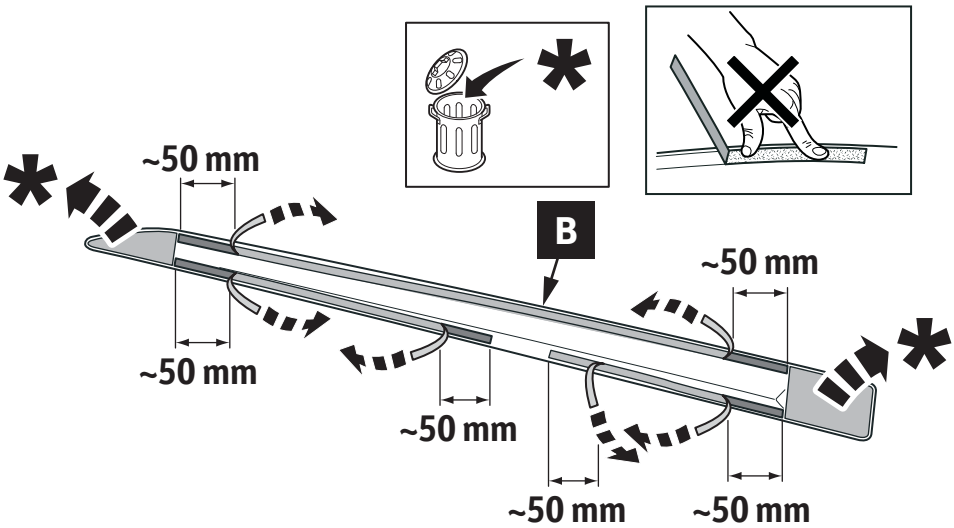

8

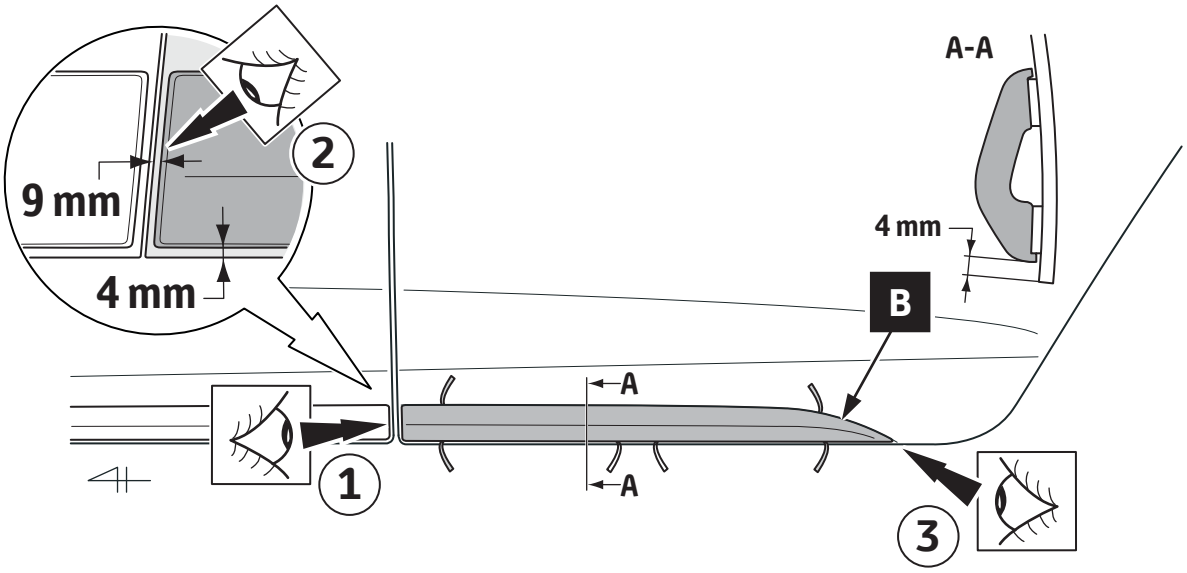

9

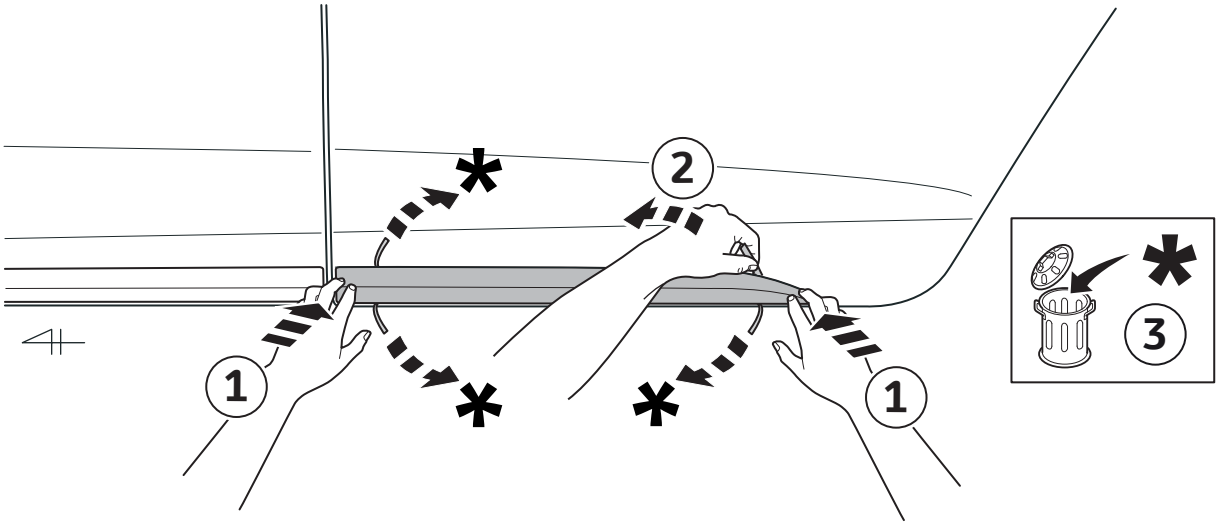

10

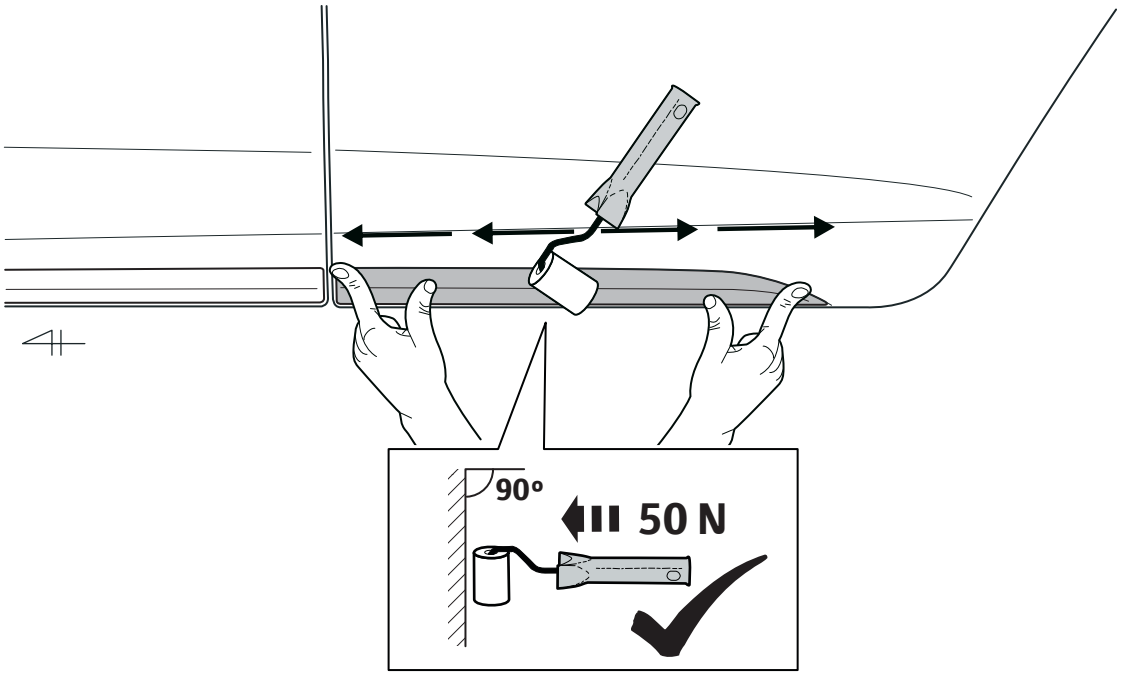

11

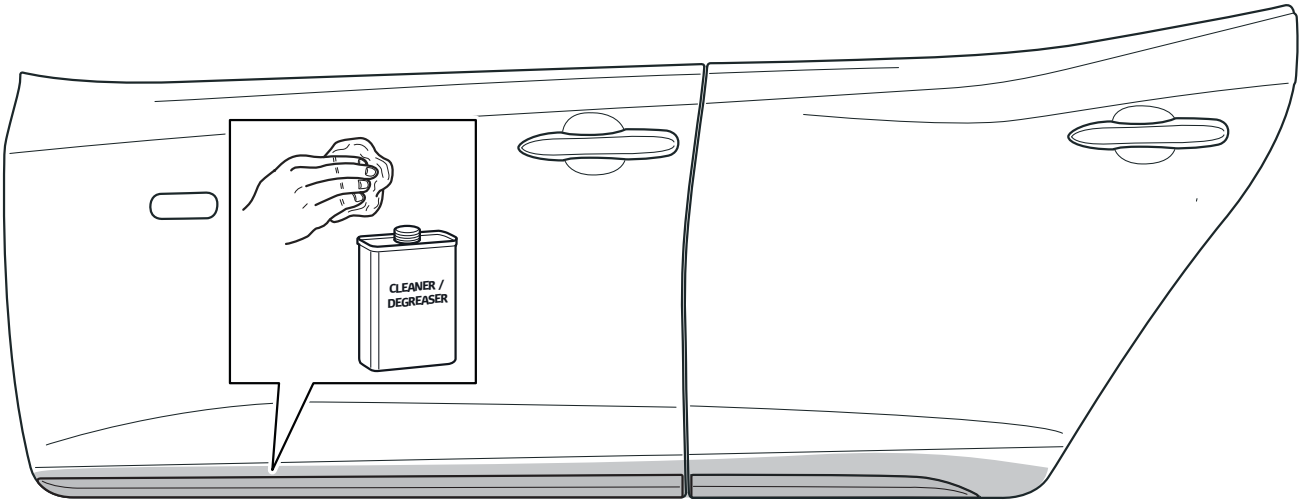

12

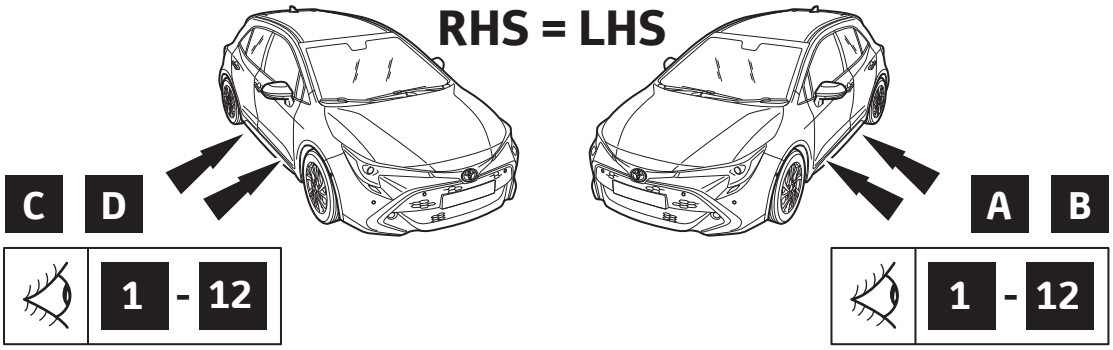

13

INFO

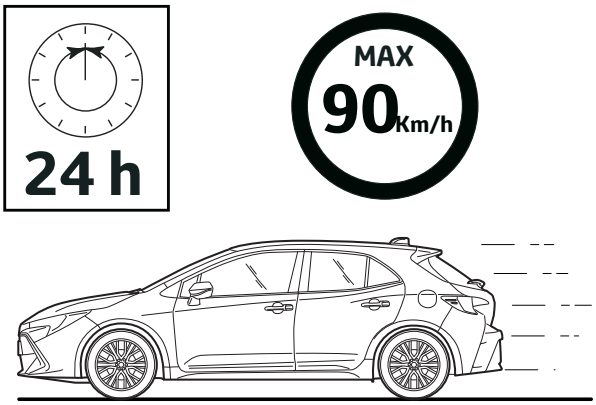

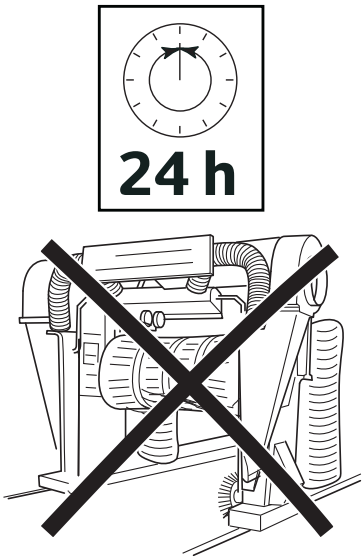

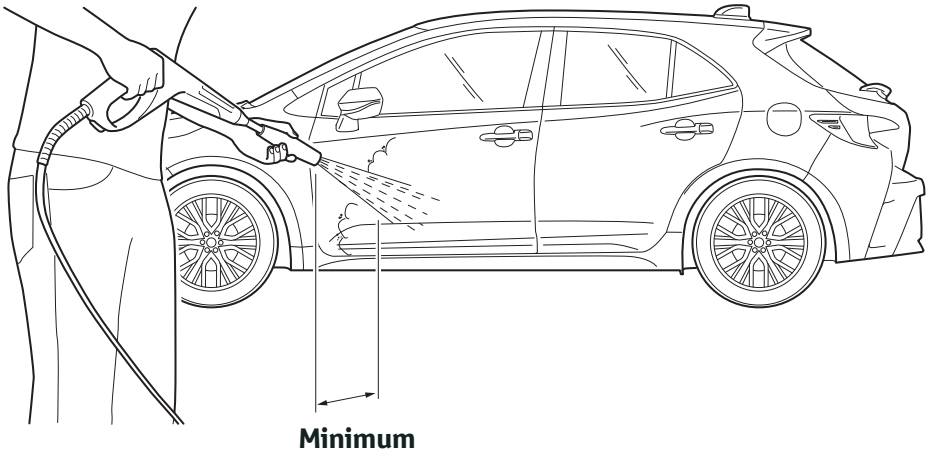

CHECK SHEET

Model / Year **Corolla (Sedan) 2019/01** **Side sills**

VIN n° ☐☐☐☐☐☐☐☐☐☐☐☐☐☐☐☐☐

TOYOTA

ALWAYS A BETTER WAY

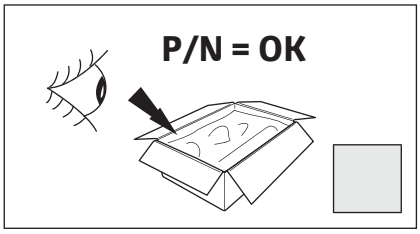

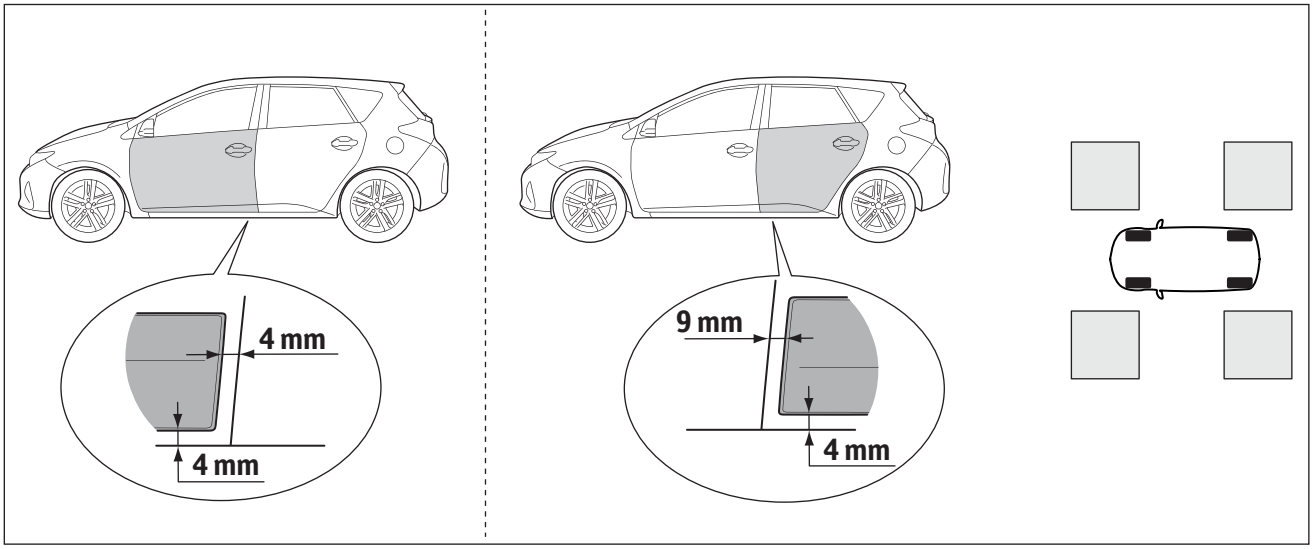

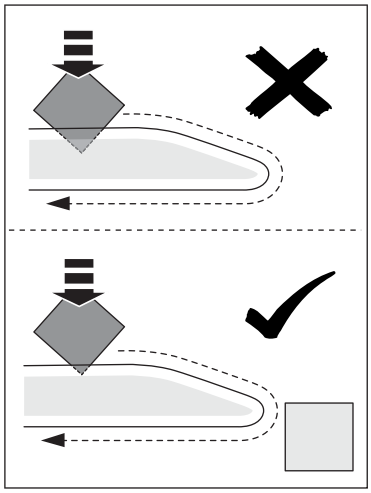

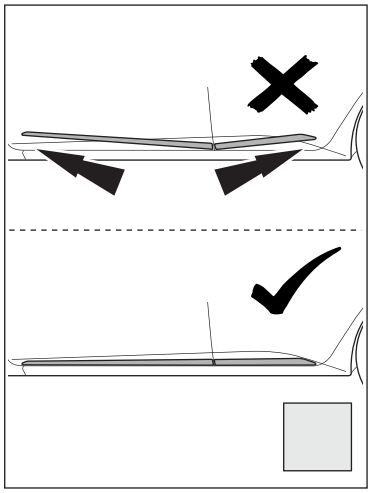

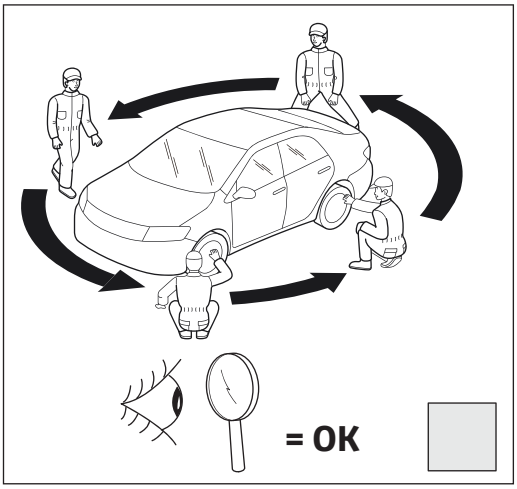

Installation Date:	Technician Name & Signature:	Stamp:
. . / . . /		